REVISIONS

EFFECTIVITY	REV	DESCRIPTION	DATE	APPROVED
FUTURE	A	FIRST RELEASE ISSUE	2 / 15 / 00	

NOTES:

1. MOTOR ASSEMBLY SHOWN WITH SPECIFIED MOTOR HARDWARE & RELOAD KIT.

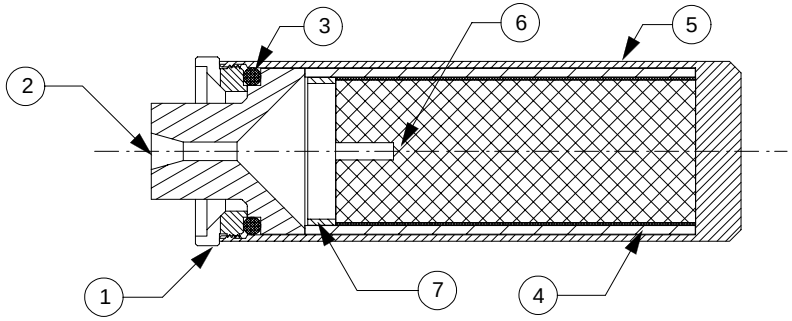

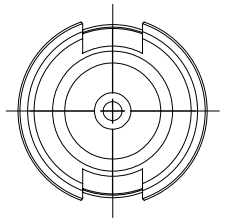

VIEW AFT CLOSURE

QTY	PART NUMBER	DESCRIPTION	ITEM
			8
1	03103	GRAIN SPACER TUBE (.77" O.D. X .146)	7
1	03504	PROPELLANT GRAINS (.772 O.D. X 1.875")	6
1	021296-01	CASE	5
1	02010	LINER (.865" O.D. X 2.03")	4
1	00115	AFT O-RING (7/8" O.D. X 3/32") 115	3
1	01250-1	NOZZLE (E6/E15) DRILLED .099"	2
1	910791C	AFT CLOSURE	1

LIST OF MATERIAL

SUPPLIER DATA	RELOAD KIT IDENTIFICATION	
AEROTECH INC.	50600	E6-RCT
	PART NUMBER	DESCRIPTION

UNLESS OTHERWISE SPECIFIED DIMENSIONS ARE IN INCHES

.XX +/- .010	.XXX +/- .005	ANGLES +/- 2 deg.

MATERIAL

NOTED

FINISH

CONTRACT NUMBER

PREP B. ROSENFIELD 7 / 99

CHKR

APVD

APVD

AEROTECH® CONSUMER AEROSPACE
2113 W. 850 N. Street
Cedar City, Utah 84720
(435) 865-7100 (Ph)
(435) 865-7120 (Fax)

RMS-RC 24/20 MOTOR WITH E6-RCT RELOAD KIT

SIZE A NUMBER **ASSY DWG**

SCALE 1 / 1 SHEET 1 OF 1