REVISIONS

EFFECTIVITY	REV	DESCRIPTION	DATE	APPROVED
FUTURE	A	FIRST RELEASE ISSUE	12 / 29 / 04	

NOTES:

1. MOTOR ASSEMBLY SHOWN WITH SPECIFIED MOTOR HARDWARE & RELOAD KIT.

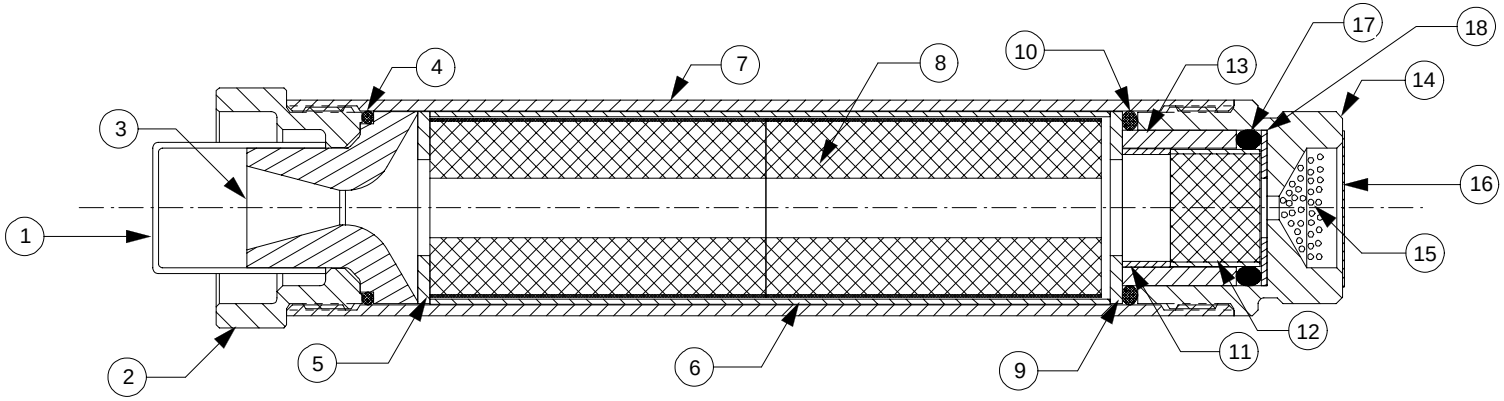

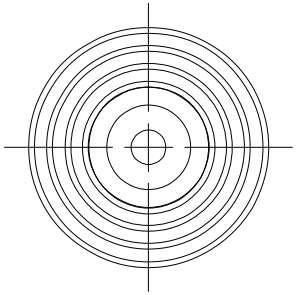

VIEW AFT CLOSURE

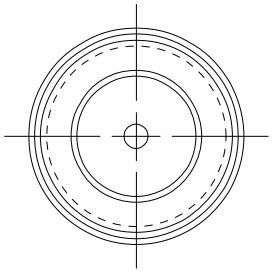

VIEW FORWARD CLOSURE

QTY	PART NUMBER	DESCRIPTION	ITEM
1	03350	FWD DELAY SPACER (13/16" O.D. X .031")	18
1	00001	DELAY O-RING (15MM I.D. X 3MM THICK)	17
1	05602	EJECTION CHARGE CAP (13/16")	16
1	03700	EJECTION CHARGE (FILLS WELL 3/4 FULL)	15
1	29FCC	FORWARD CLOSURE	14
1	03300	DELAY INSULATOR (.807" O.D. X .594")	13
1	03363	DELAY GRAIN (.610" O.D. X .469")	12
1	03320	AFT DELAY SPACER (.615" O.D. X .250")	11
1	00117	FORWARD O-RING (1" O.D. X 3/32") 117	10
1	05402	FORWARD INSULATOR(1"O.D.X.5"I.D.X1/16")	9
2	03541-5	PROPELLANT GRAINS (.933" O.D. X 1.750")	8
1	2912C	CASE	7
1	02032	LINER (1.00" O.D. X 3.548")	6
1	05402	AFT INSULATOR (1" O.D. X .5" I.D. X 1/16")	5
1	00020	AFT O-RING (1" O.D. X 1/16") 020	4
1	01500	NOZZLE (F60/G80) .180" DT UNDRILLED	3
1	29ACC	AFT CLOSURE	2
1	04580	NOZZLE CAP (5/8" I.D.)	1

LIST OF MATERIAL

SUPPLIER DATA	RELOAD KIT IDENTIFICATION	
AEROTECH	07077M	G77R-M RMS-PLUS (RDK-04)
	PART NUMBER	DESCRIPTION

UNLESS OTHERWISE SPECIFIED DIMENSIONS ARE IN INCHES

.XX +/- .010	.XXX +/- .005	ANGLES +/- 2 deg.

MATERIAL

NOTED

FINISH

CONTRACT NUMBER

PREP B. ROSENFIELD 11 / 04

CHKR

APVD

APVD

RCS ROCKET MOTOR COMPONENTS, INC.
2113 W. 850 N. Street
Cedar City, Utah 84720
(435) 865-7100 (Ph)
(435) 865-7120 (Fax)

HP-29/120 MOTOR WITH G77R-M RMS-PLUS™ RELOAD KIT

SIZE A NUMBER **ASSY DWG**

SCALE 1 / 1 SHEET 1 OF 1