REVISIONS

EFFECTIVITY	REV	DESCRIPTION	DATE	APPROVED
FUTURE	A	FIRST RELEASE ISSUE	11 /11 / 99	
FUTURE	B	RMS-PLUS™ DELAY SYTEM (SEE E.O.)	3 / 2 / 00	

NOTES:

1. MOTOR ASSEMBLY SHOWN WITH SPECIFIED MOTOR HARDWARE & RELOAD KIT.

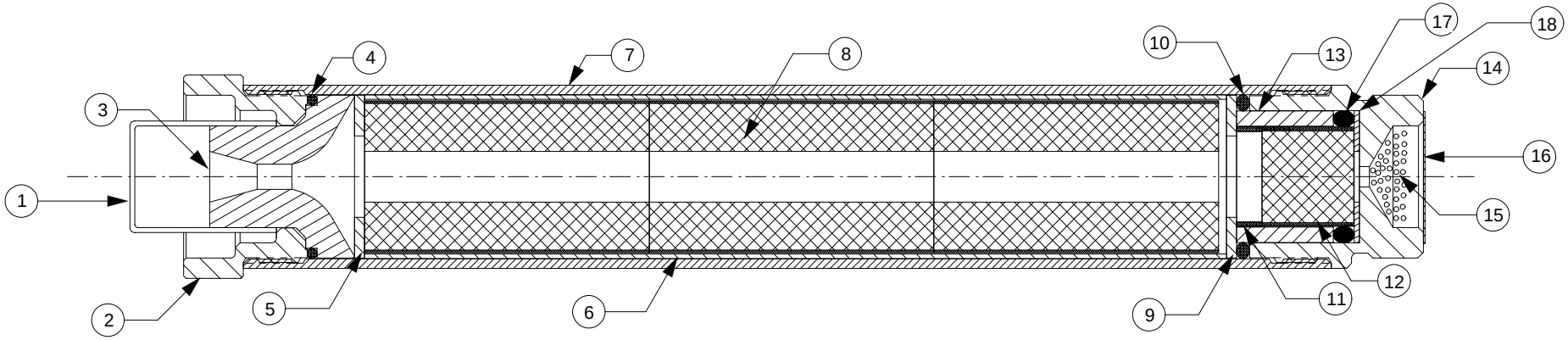

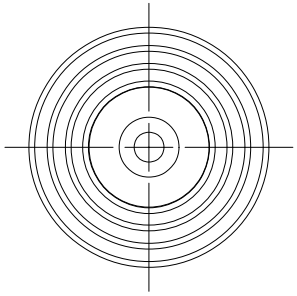

VIEW AFT CLOSURE

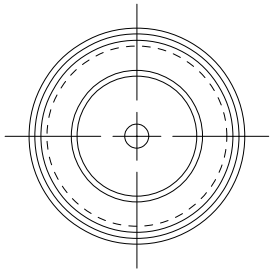

VIEW FORWARD CLOSURE

QTY	PART NUMBER	DESCRIPTION	ITEM
1	03350	FWD DELAY SPACER (13/16" O.D. X .031")	18
1	00001	DELAY O-RING (15MM I.D. X 3MM THICK)	17
1	05602	EJECTION CHARGE CAP (13/16")	16
1	03700	EJECTION CHARGE (FILLS WELL 3/4 FULL)	15
1	29FCC	FORWARD CLOSURE	14
1	03300	DELAY INSULATOR (.807" O.D. X .594")	13
1	03368	DELAY GRAIN (.610" O.D. X .563")	12
1	03312	AFT DELAY SPACER (.615" O.D. X .156")	11
1	00117	FORWARD O-RING (1" O.D. X 3/32") 117	10
1	05402	FORWARD INSULATOR(1"O.D.X.5"I.D.X1/16")	9
3	03541-3	PROPELLANT GRAINS (.933" O.D. X 1.750")	8
1	2918C	CASE	7
1	02035	LINER (1.00" O.D. X 5.298")	6
1	05402	AFT INSULATOR (1" O.D. X .5" I.D. X 1/16")	5
1	00020	AFT O-RING (1" O.D. X 1/16") 020	4
1	01450-2	NOZZLE (G45/F60) DRILLED .156"	3
1	29ACC	AFT CLOSURE	2
1	04580	NOZZLE CAP (5/8" I.D.)	1

LIST OF MATERIAL

SUPPLIER DATA	RELOAD KIT IDENTIFICATION	
AEROTECH INC.	07075S	G75J-S RMS PLUS
	PART NUMBER	DESCRIPTION

UNLESS OTHERWISE SPECIFIED DIMENSIONS ARE IN INCHES

.XX +/- .010	.XXX +/- .005	ANGLES +/- 2 deg.

MATERIAL

NOTED

FINISH

CONTRACT NUMBER

AEROTECH® CONSUMER AEROSPACE
2113 W. 850 N. Street
Cedar City, Utah 84720
(435) 865-7100 (Ph)
(435) 865-7120 (Fax)

PREP B. ROSENFIELD 8 / 99
CHKR
APVD
APVD

HP-29/180 MOTOR WITH G75J-S RMS-PLUS™ RELOAD KIT

SIZE A NUMBER **ASSY DWG**

SCALE 1 / 1 SHEET 1 OF 1