REVISIONS				
EFFECTIVITY	REV	DESCRIPTION	DATE	APPROVED
FUTURE	A	FIRST RELEASE ISSUE	11 / 10 / 99	

NOTES:

1. MOTOR ASSEMBLY SHOWN WITH SPECIFIED MOTOR HARDWARE & RELOAD KIT.

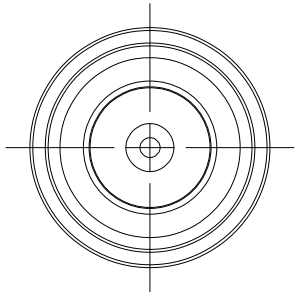

VIEW AFT CLOSURE

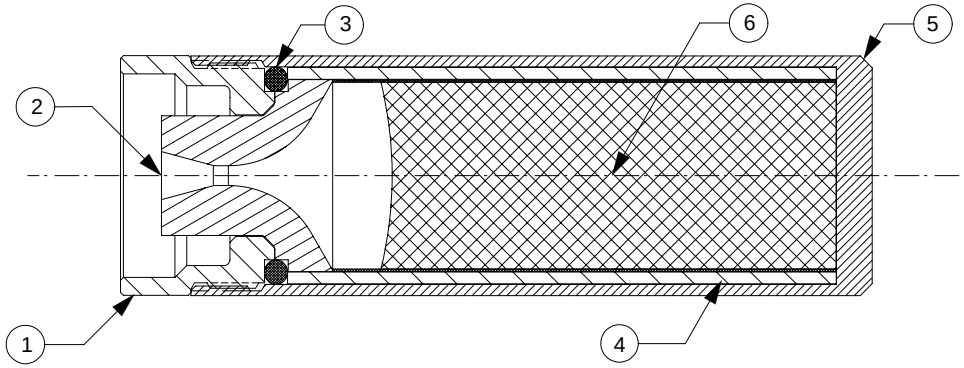

QTY	PART NUMBER	DESCRIPTION	ITEM
1	03570	PROPELLANT GRAINS (1.00 O.D." X 2.625")	6
1	011496-01	CASE	5
1	02050	LINER (1.13" O.D. X 2.860")	4
1	00212	AFT O-RING (1 1/8" X 1/8") 212	3
1	01400	NOZZLE (F10/F30)	2
1	902604A	AFT CLOSURE	1

LIST OF MATERIAL

SUPPLIER DATA	RELOAD KIT IDENTIFICATION	
AEROTECH INC.	91712	G12-RCT
	PART NUMBER	DESCRIPTION

UNLESS OTHERWISE SPECIFIED DIMENSIONS ARE IN INCHES

.XX +/- .010	.XXX +/- .005	ANGLES +/- 2 deg.

MATERIAL

NOTED

FINISH

CONTRACT NUMBER

PREP B. ROSENFIELD 8 / 99

CHKR

APVD

APVD

AEROTECH® CONSUMER AEROSPACE
2113 W. 850 N. Street
Cedar City, Utah 84720
(435) 865-7100 (Ph)
(435) 865-7120 (Fax)

RMS-RC 32/60 MOTOR WITH G12-RCT RELOAD KIT

SIZE A NUMBER **ASSY DWG**

SCALE 1 / 1 SHEET 1 OF 1