REVISIONS

EFFECTIVITY	REV	DESCRIPTION	DATE	APPROVED
FUTURE	A	FIRST RELEASE ISSUE	12 / 29 / 04	

NOTES:

1. MOTOR ASSEMBLY SHOWN WITH SPECIFIED MOTOR HARDWARE & RELOAD KIT.

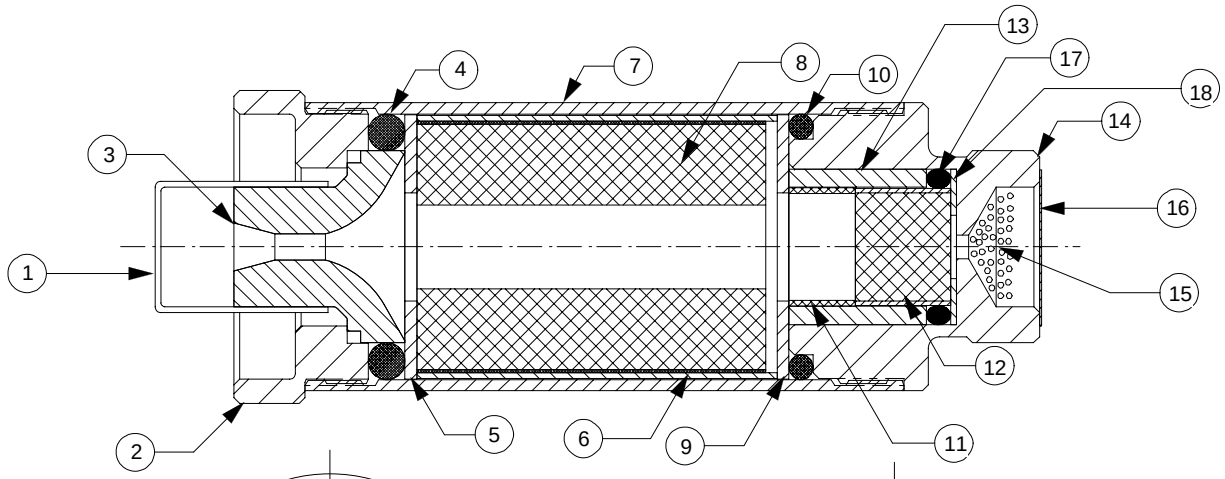

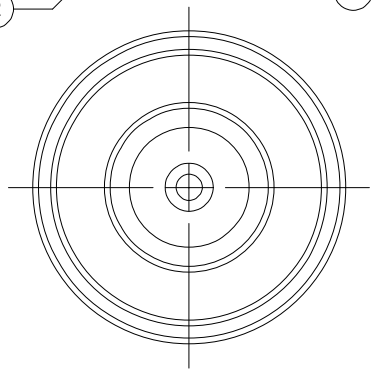

VIEW AFT CLOSURE

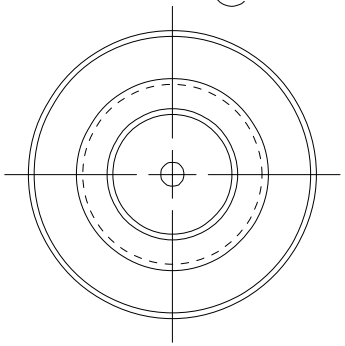

VIEW FORWARD CLOSURE

QTY	PART NUMBER	DESCRIPTION	ITEM
1	03350	FWD DELAY SPACER (13/16" O.D. X .031")	18
1	00001	DELAY O-RING (15MM I.D. X 3MM THICK)	17
1	05602	EJECTION CHARGE CAP (13/16")	16
1	03700	EJECTION CHARGE (FILLS WELL 3/4 FULL)	15
1	38FCC	FORWARD CLOSURE	14
1	03302	DELAY INSULATOR (.807" O.D. X .719")	13
1	03366	DELAY GRAIN (.61" O.D. X .500")	12
1	03326	AFT DELAY SPACER (.615" O.D. X .344")	11
1	00216	FORWARD O-RING (1 3/8" O.D. X 1/8") 216	10
1	05404	FWD INSULATOR(1.375"O.D.X.562"I.D.X1/16")	9
1	03581-5	PROPELLANT GRAINS (1.308" O.D. X 1.815")	8
1	3812C	CASE	7
1	02052	LINER (1.372" O.D. X 1.875")	6
1	05404	AFT INSULATOR(1.375"O.D.X.562"I.D.X1/16")	5
1	00318	AFT O-RING (1.375" O.D. X 3/16") 318	4
1	01400-3	NOZZLE (F10/F30) DRILLED .136"	3
1	38AC2	AFT CLOSURE L2	2
1	04580	NOZZLE CAP (5/8" I.D.)	1

LIST OF MATERIAL

SUPPLIER DATA	RELOAD KIT IDENTIFICATION	
AEROTECH	07067M	G67R-M RMS-PLUS (RDK-11)
	PART NUMBER	DESCRIPTION

UNLESS OTHERWISE SPECIFIED DIMENSIONS ARE IN INCHES

.XX +/- .010	.XXX +/- .005	ANGLES +/- 2 deg.

MATERIAL

NOTED

FINISH

CONTRACT NUMBER

PREP B. ROSENFIELD 11 / 04

CHKR

APVD

APVD

RCS ROCKET MOTOR COMPONENTS, INC.
2113 W. 850 N. Street
Cedar City, Utah 84720
(435) 865-7100 (Ph)
(435) 865-7120 (Fax)

HP 38/120 MOTOR WITH G67R-M RMS-PLUS™ RELOAD KIT

SIZE A NUMBER **ASSY DWG**

SCALE 1 / 1 SHEET 1 OF 1