REVISIONS

EFFECTIVITY	REV	DESCRIPTION	DATE	APPROVED
FUTURE	A	FIRST RELEASE ISSUE	11 / 12 / 99	
FUTURE	B	RMS-PLUS™ DELAY SYSTEM	01 / 15 / 02	

NOTES:

1. MOTOR ASSEMBLY SHOWN WITH SPECIFIED MOTOR HARDWARE & RELOAD KIT.

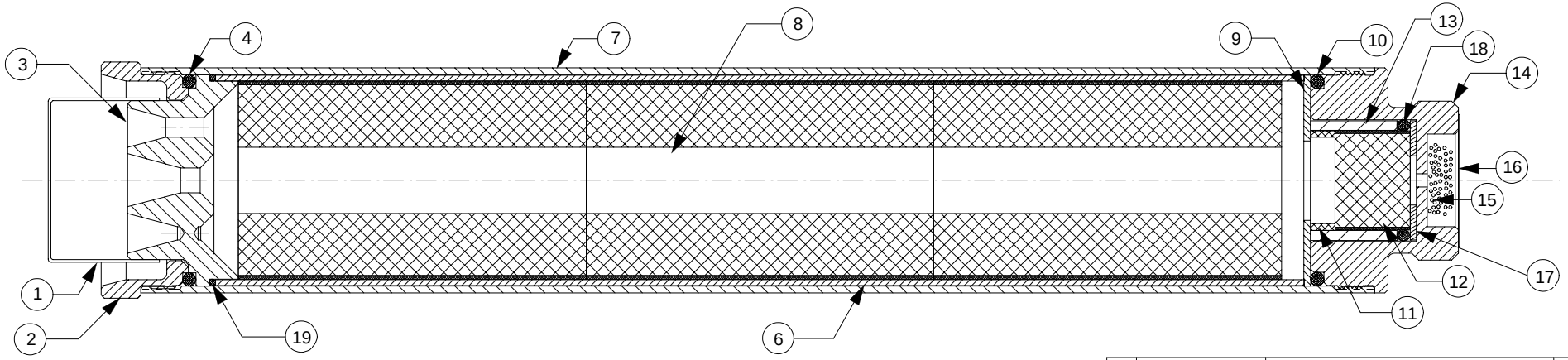

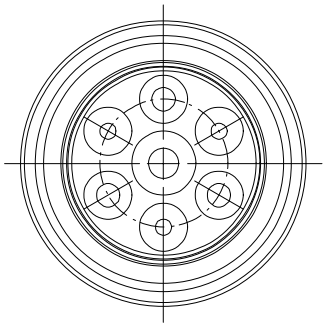

VIEW AFT CLOSURE

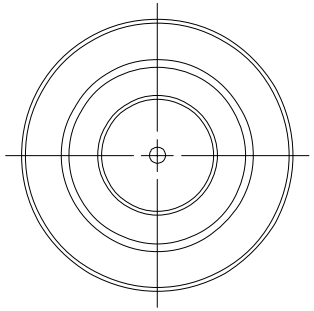

VIEW FORWARD CLOSURE

QTY	PART NUMBER	DESCRIPTION	ITEM
1	00032	LINER O-RING (2" O.D. X 1/16") 032	19
1	00002	DELAY O-RING (1.17" O.D. X .123")	18
1	03355	FWD DELAY SPACER (1-1/8" O.D. X .062")	17
1	05604	EJECTION CHARGE CAP (1-1/4")	16
1	03700	EJECTION CHARGE (USER SUPPLIED)	15
1	54FCC	FORWARD CLOSURE (REGULAR)	14
1	03356	DELAY INSULATOR (1.13" O.D. X .815")	13
1	03914	DELAY GRAIN(.933" O.D. X .708")	12
1	03964	AFT DELAY SPACER (.94" O.D. X .230")	11
1	00224	FORWARD O-RING (2" O.D. X 1/8") 224	10
1	05406	FORWARD INSULATOR (1.99" O.D. X 1/16")	9
3	03601	PROPELLANT GRAINS (1.87" O.D. X 3.285")	8
1	5412C	CASE	7
1	03000-3	PHENOLIC LINER (1.99" O.D. X 10.280")	6
NA		INNER LINER	5
1	00224	AFT O-RING (2" O.D. X 1/8") 224	4
1	01700-6	NOZZLE (54MM MEDUSA)1x.234"/ 3x.182")	3
1	54ACC	AFT CLOSURE	2
1	04112	NOZZLE CAP (1.5" I.D.)	1

LIST OF MATERIAL

SUPPLIER DATA	RELOAD KIT IDENTIFICATION	
AEROTECH INC.	10415M	J415W-M RMS-PLUS
	RDK-28PLUS	RELOAD DELAY KIT (MEDIUM)
	PART NUMBER	DESCRIPTION

UNLESS OTHERWISE SPECIFIED DIMENSIONS ARE IN INCHES

.XX +/- .010	.XXX +/- .005	ANGLES +/- 2 deg.

MATERIAL

NOTED

FINISH

CONTRACT NUMBER

PREP B. ROSENFIELD 8 / 99

CHKR

APVD

APVD

AEROTECH® CONSUMER AEROSPACE

2113 W. 850 N. Street
Cedar City, Utah 84720
(435) 865-7100 (Ph)
(435) 865-7120 (Fax)

HP 54/1280 MOTOR WITH J415W-M RMS-PLUS™ RELOAD KIT

SIZE A NUMBER **ASSY DWG**

SCALE 1 / 1.5 SHEET 1 OF 1